UISP Horn

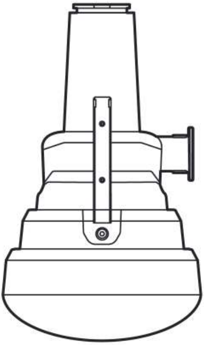

a

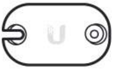

b

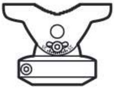

c

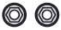

d

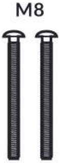

e

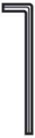

f

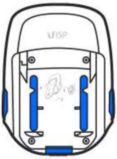

g

✓

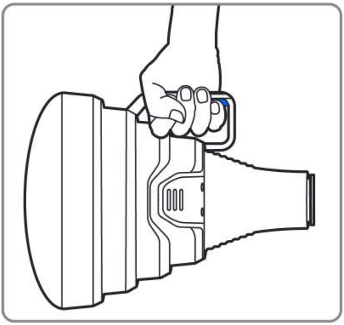

✕

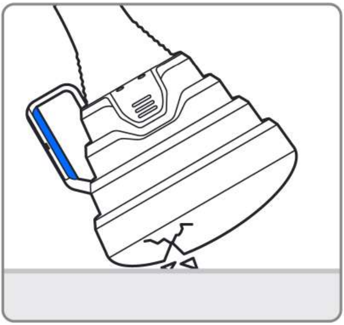

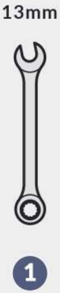

1

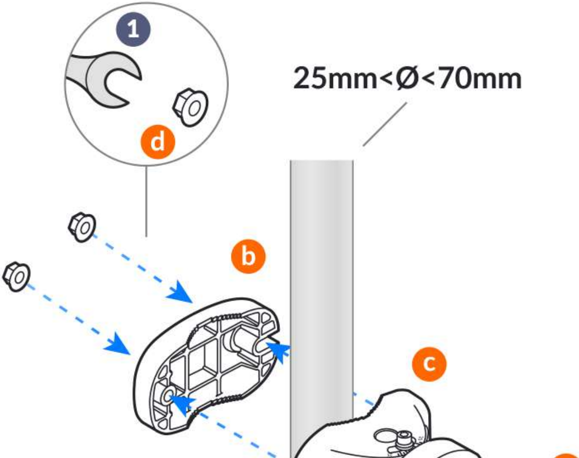
1
d
25mm<Ø<70mm
b
c

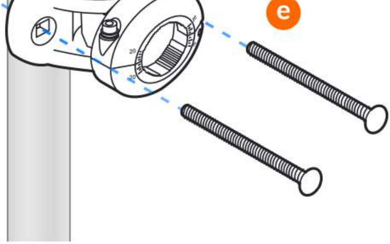

2

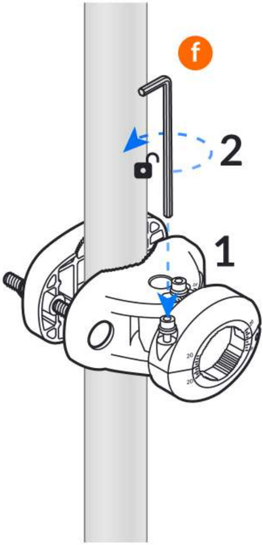

3

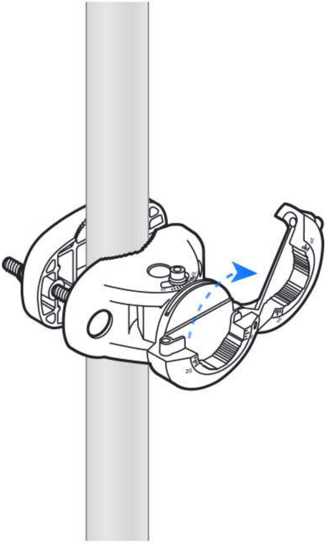

4

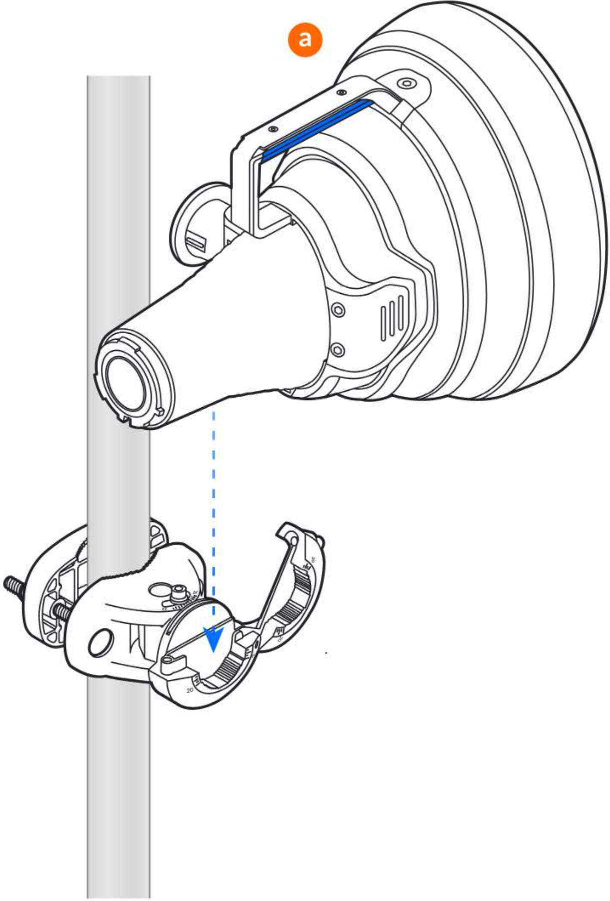

5

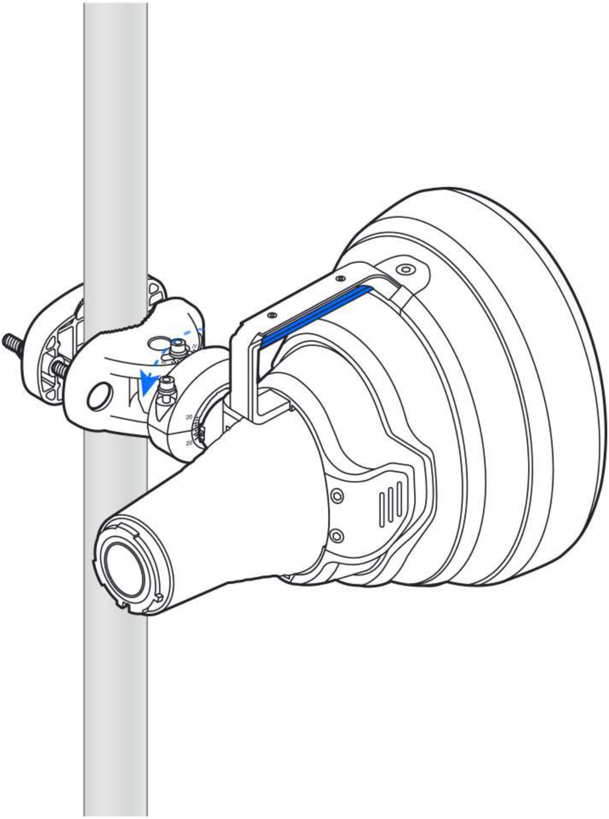

6

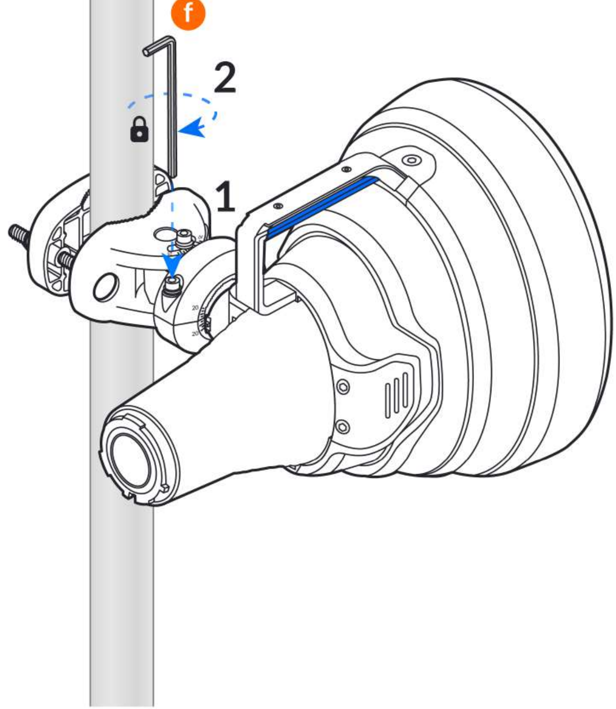

7

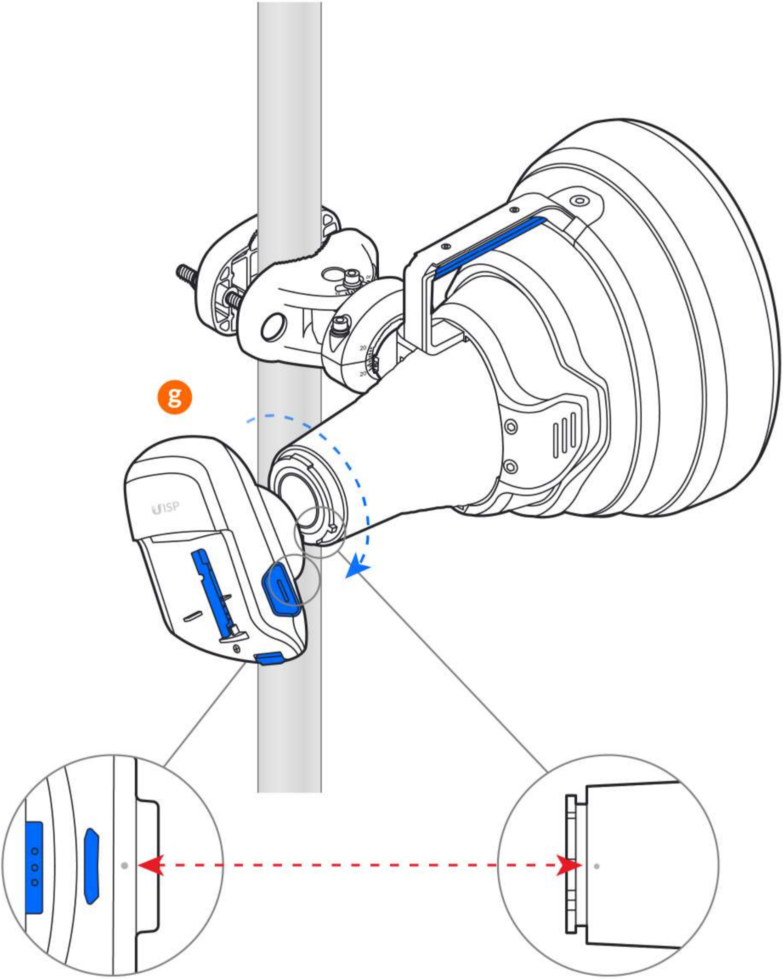

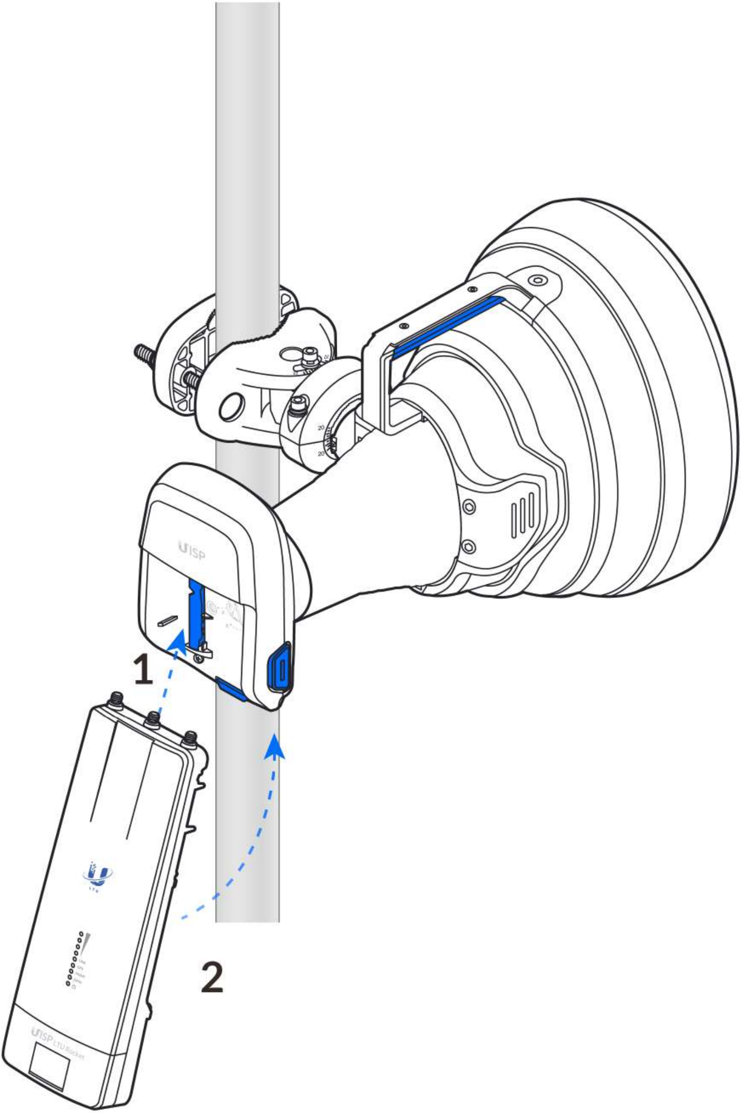
UISP
1
2
LTU
UISP LTU Rocket

9

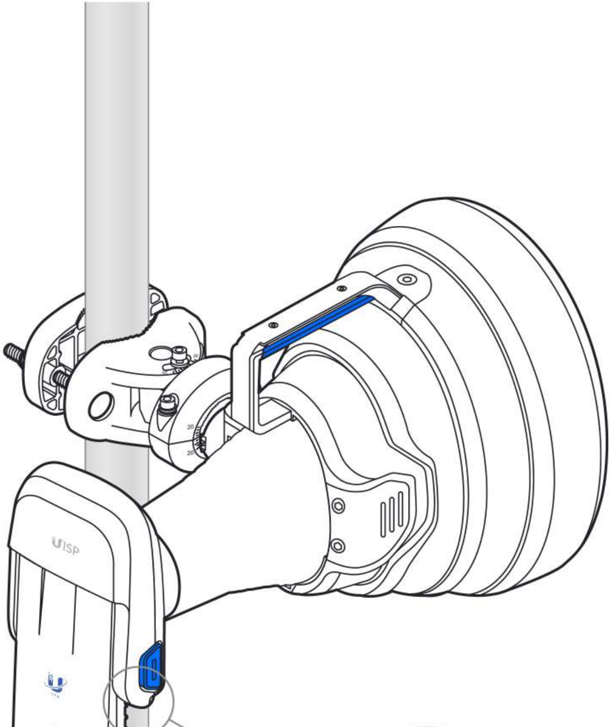

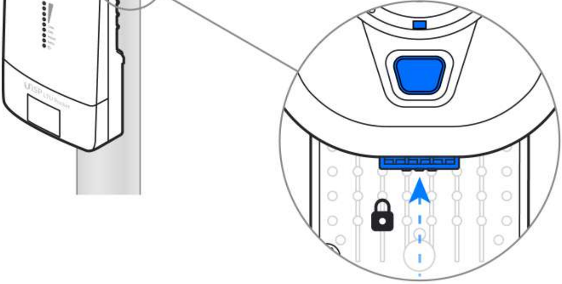
UISP LTU Rocket

10

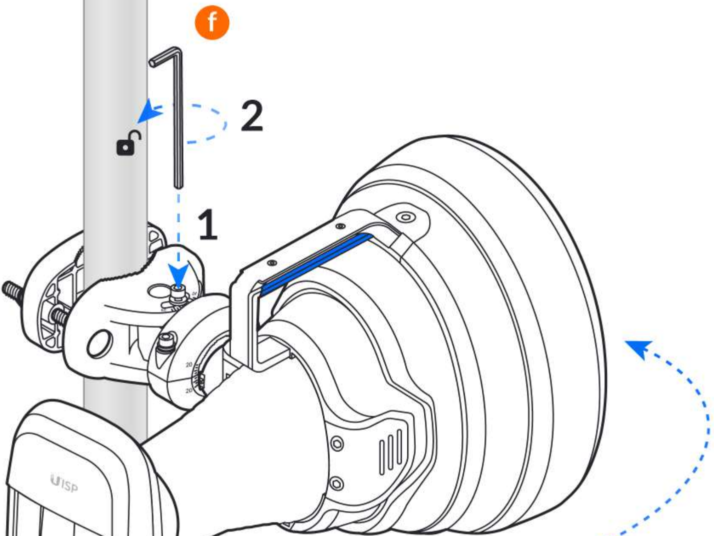
f
2
1
20
20
UISP

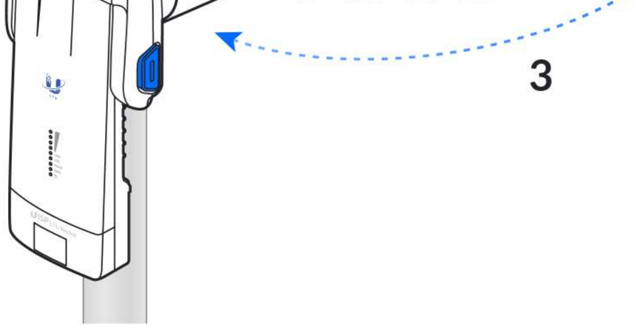
3
UISP LTU Rocket

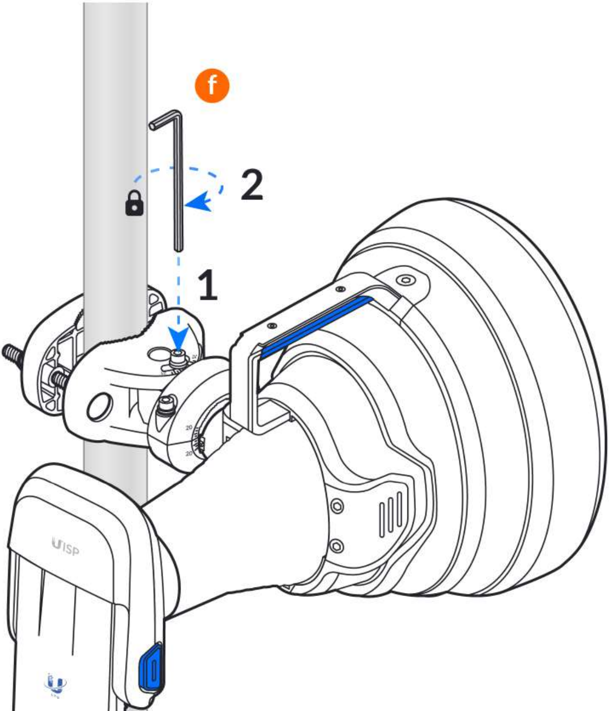
f
2
1
20
20
UISP

UISP LTU Rocket

11

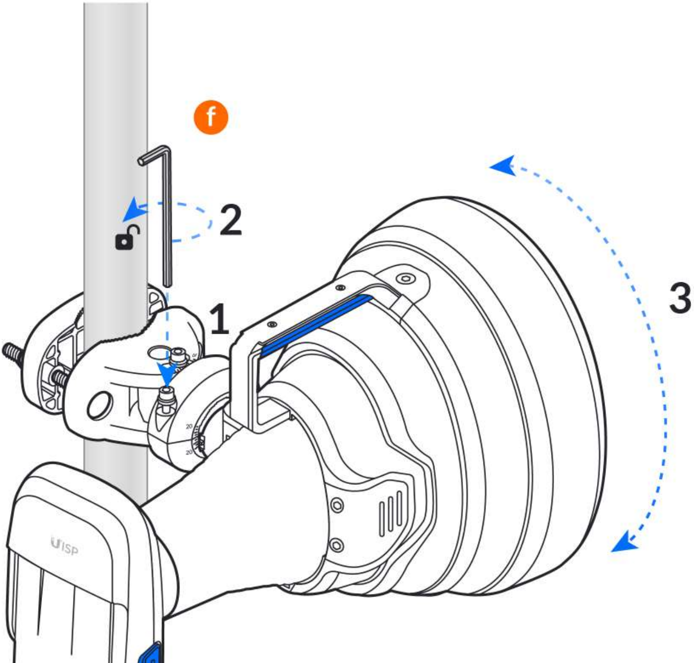
f
2
1
3
20
20
UISP

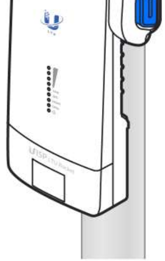

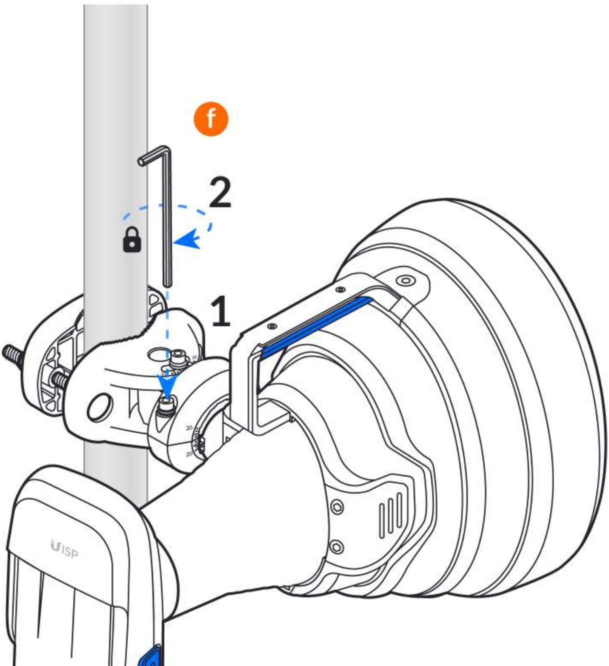

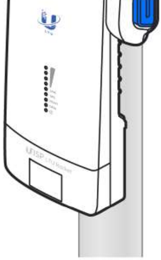
UISP LTU Rocket

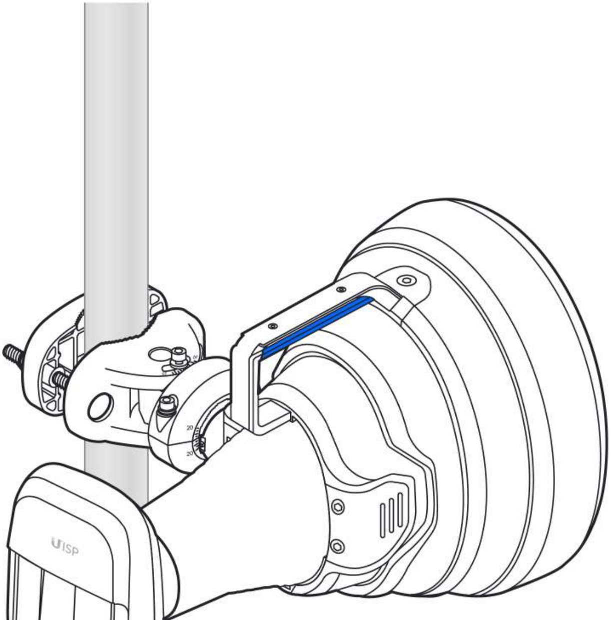

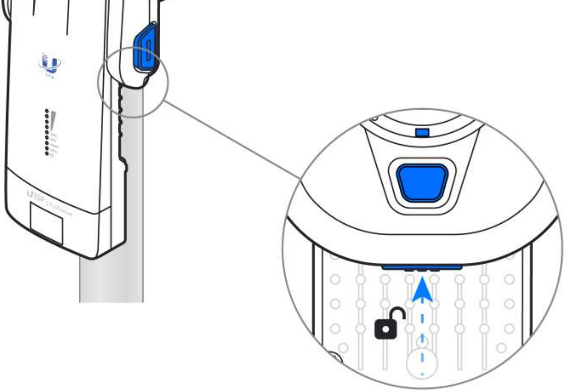

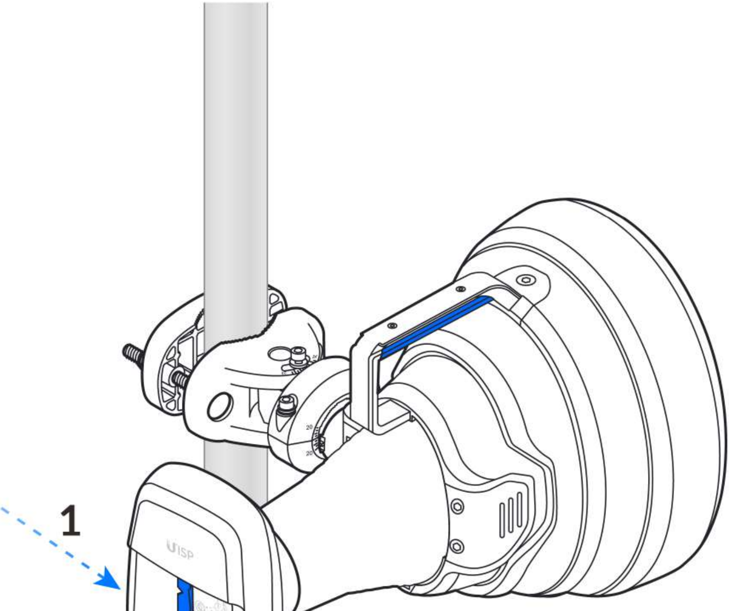

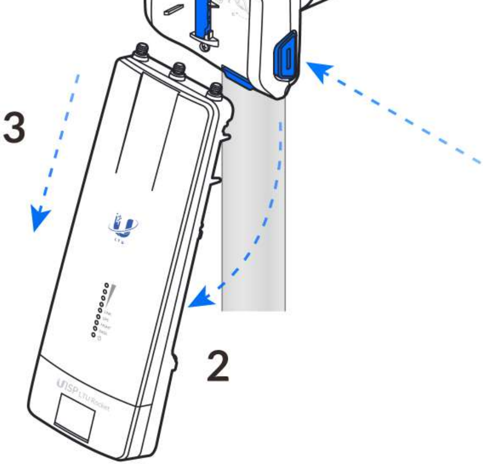
3
2
UISP LTU Rocket

A

B

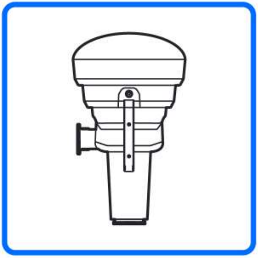

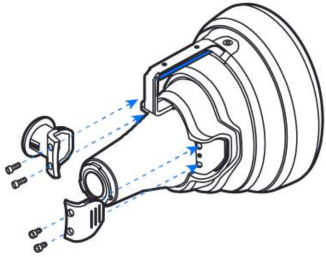

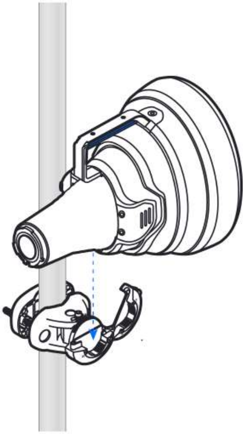

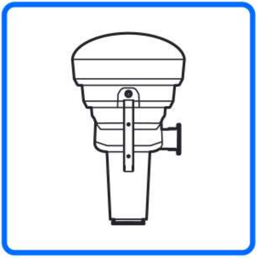

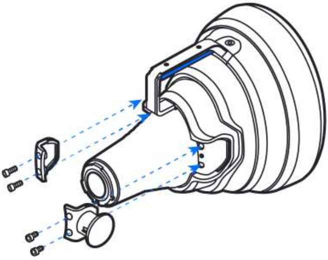

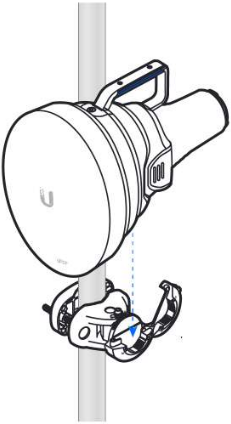

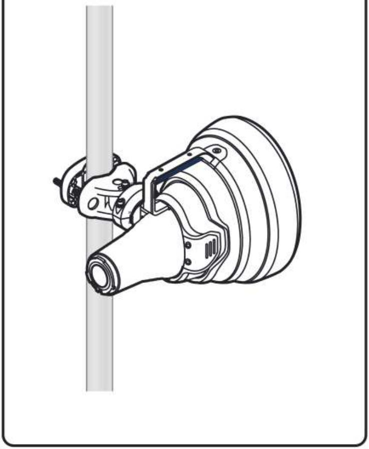

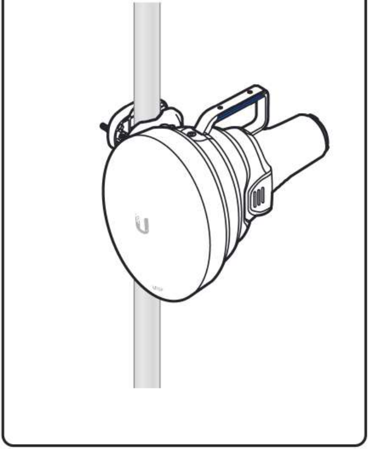

Get Answers

help.ui.com

UI Support

©2021 Ubiquiti Inc. All rights reserved. Ubiquiti, Ubiquiti Networks, the Ubiquiti U logo, UISP, and UniFi are trademarks or registered trademarks of Ubiquiti Inc. in the United States and in other countries. All other trademarks are the property of their respective owners.