UniFi® Protect G4 Dome

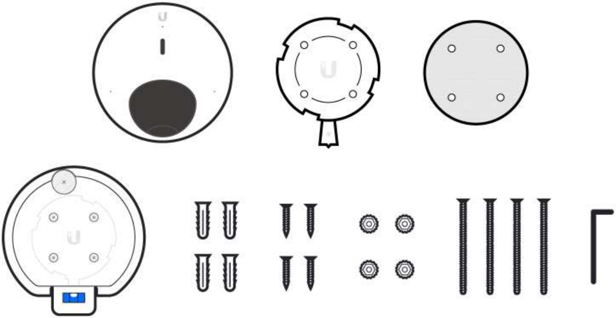

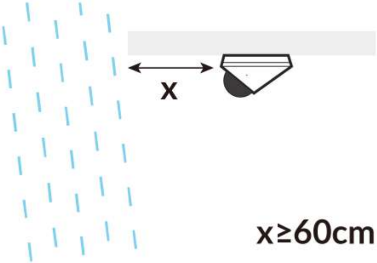

x≥60cm

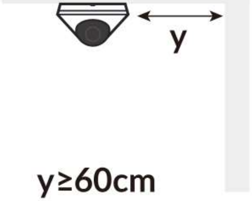

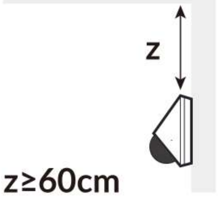

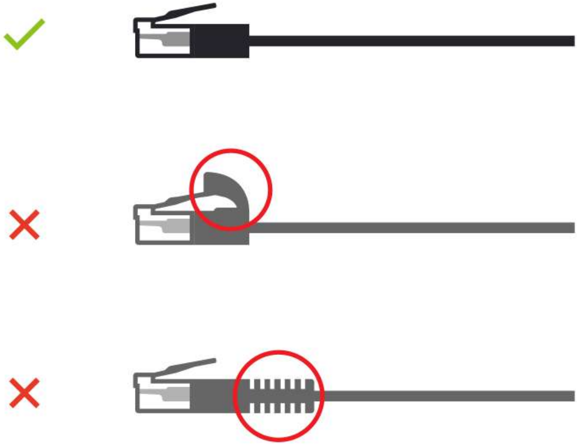

1

A

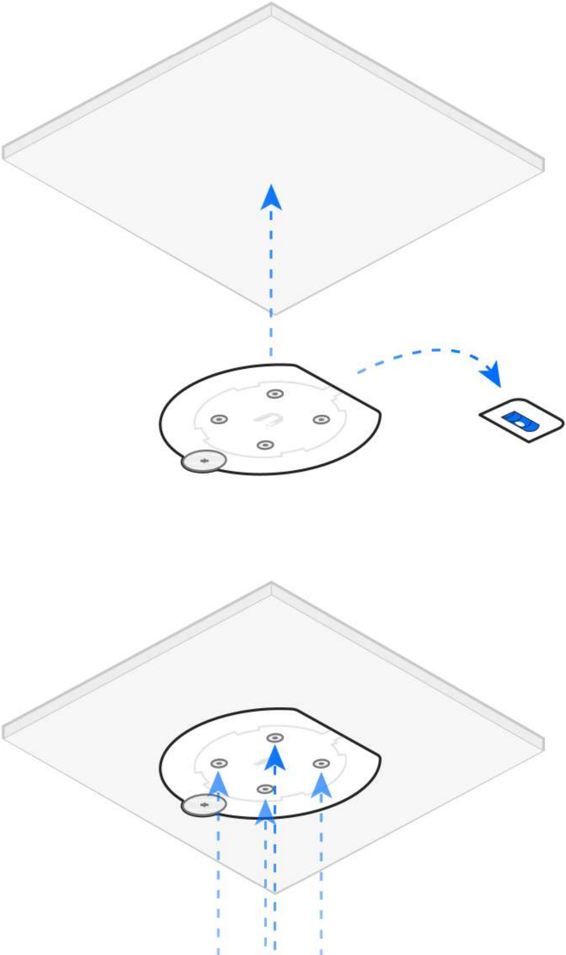

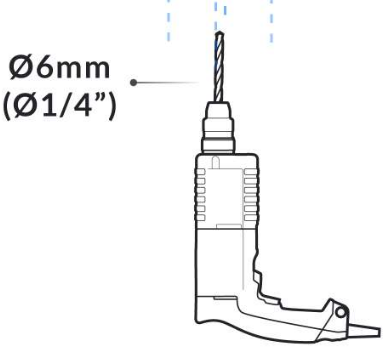

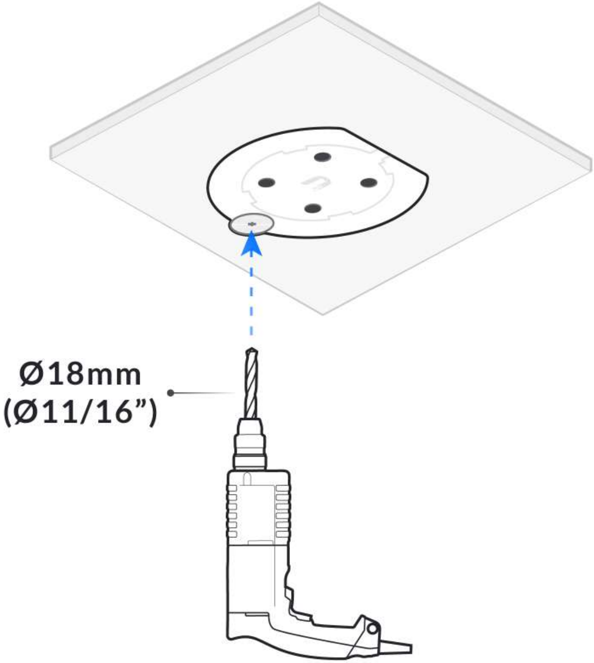
Ø18mm
(Ø11/16”)

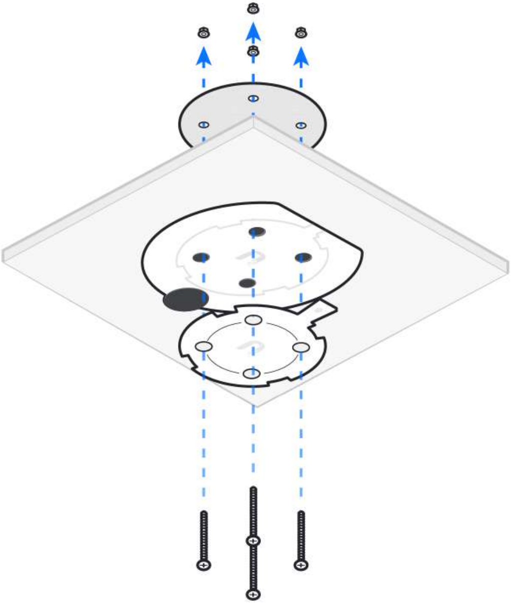

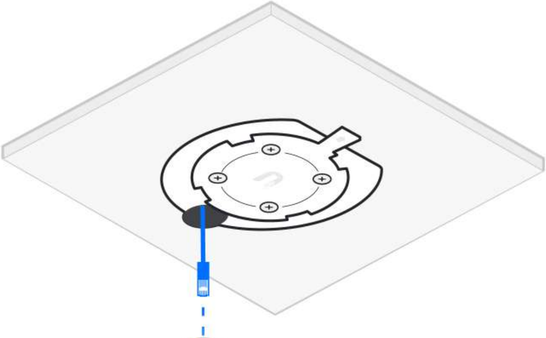

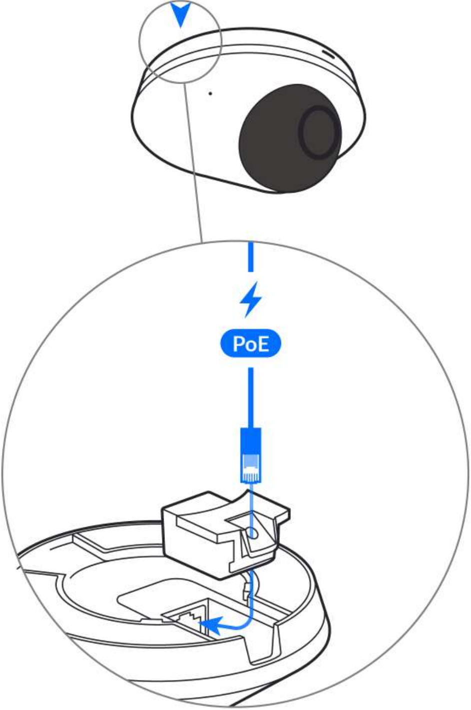

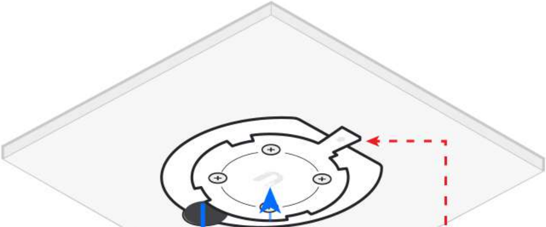

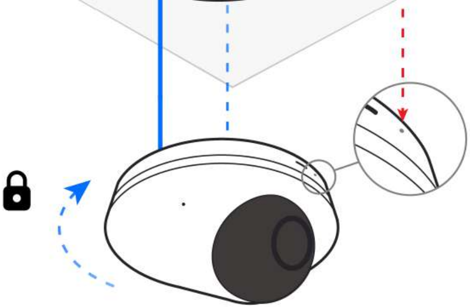

B

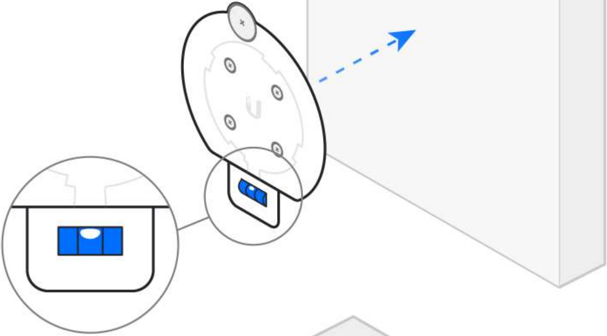

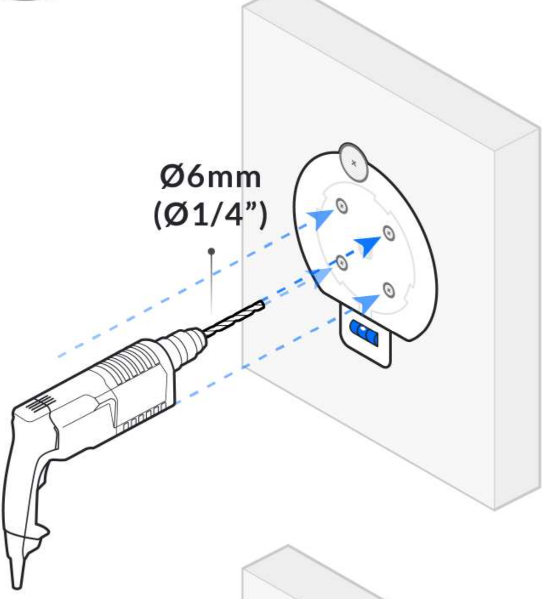

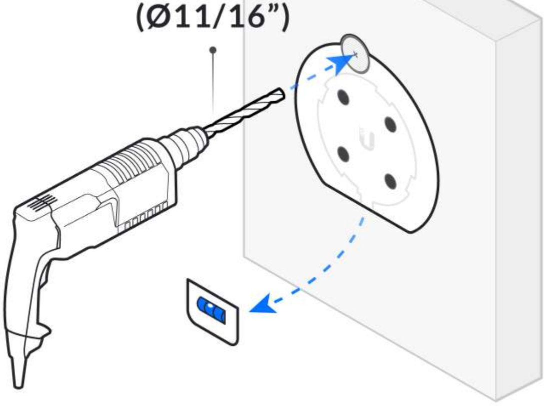

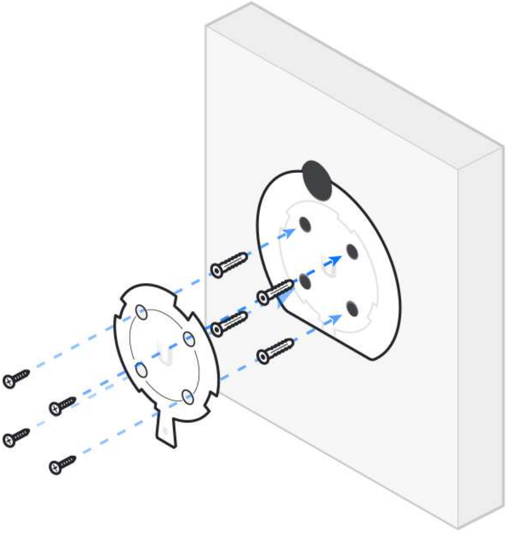

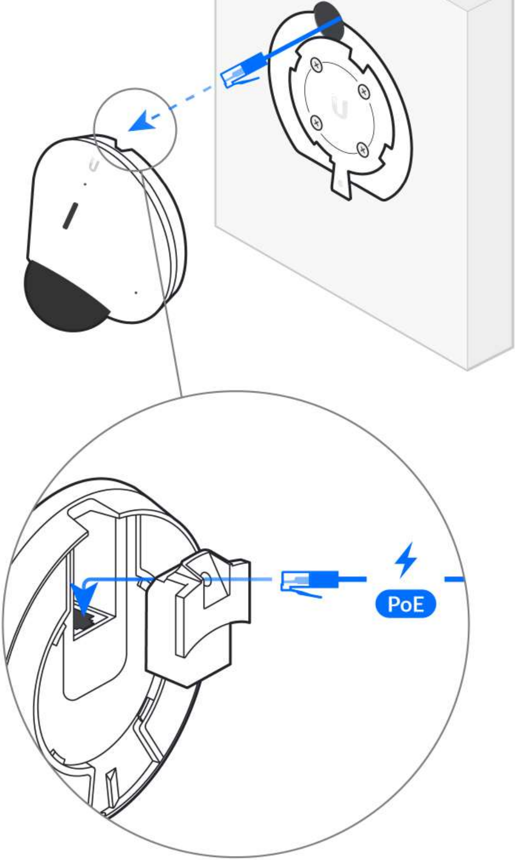

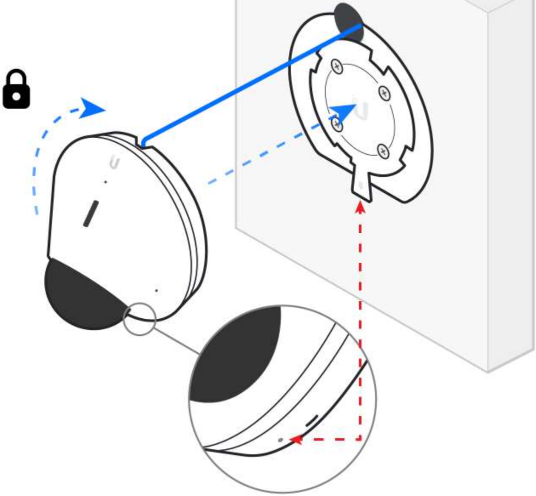

2

Internet

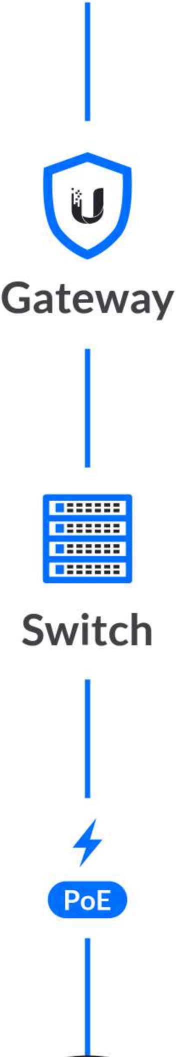
Gateway
Switch
PoE

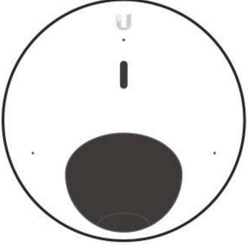

3

Download on the App Store

GET IT ON Google Play

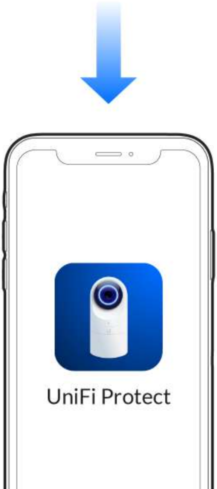
UniFi Protect

4

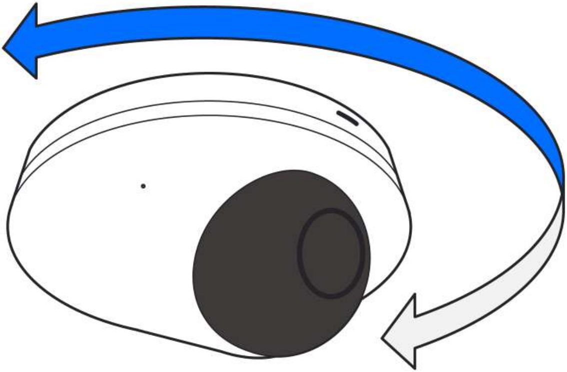

5

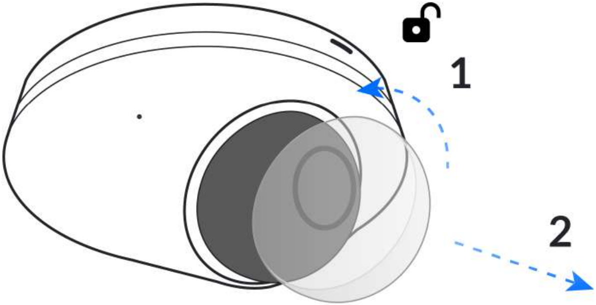

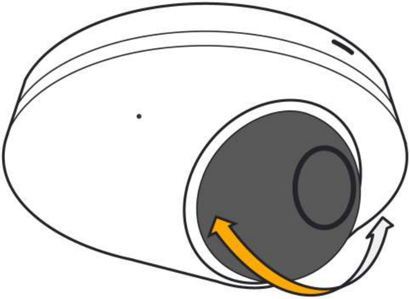

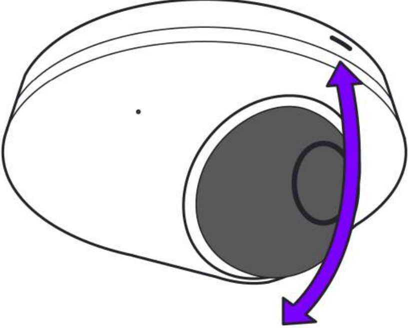

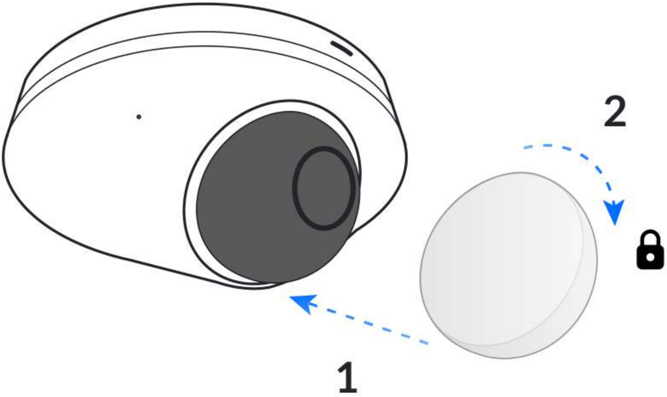

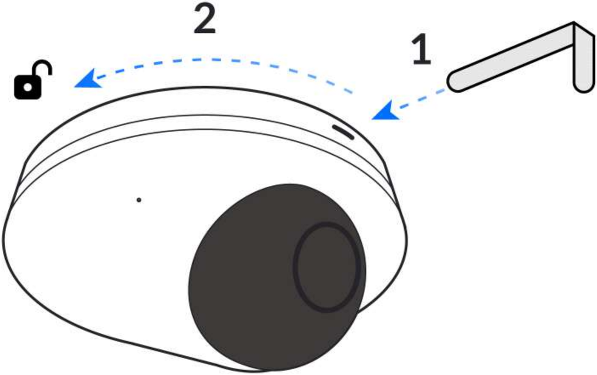

UniFi Protect

∨

Get Answers
help.ui.com

UI Support

>