UFiber Terminal Box

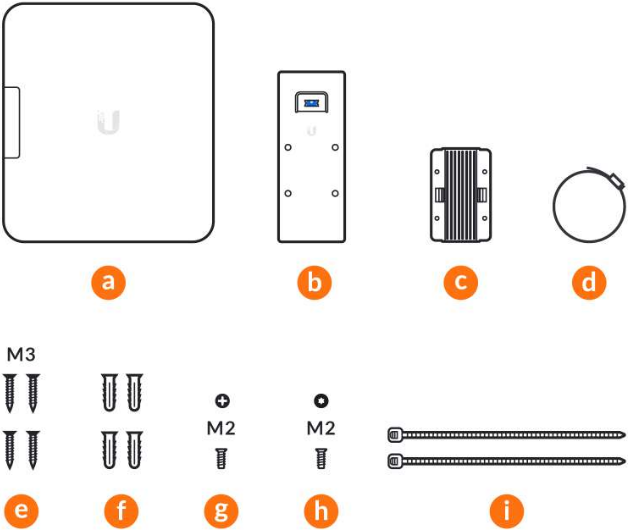
a
b
c
d
M3
M2
M2
e
f
g
h
i

1

A

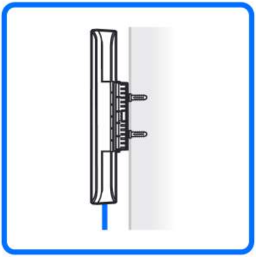

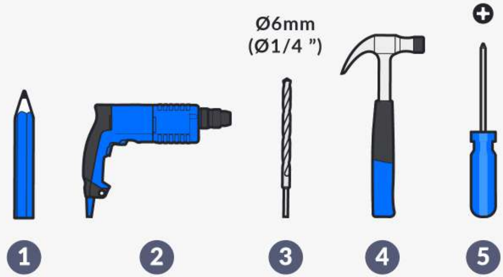
Ø6mm
(Ø1/4 ”)
⊕
1
2
3
4
5

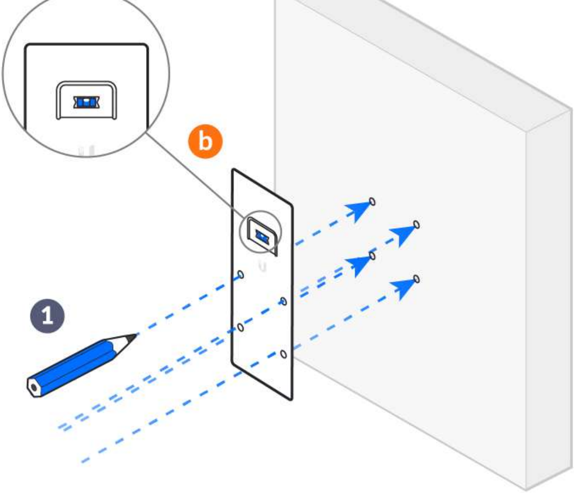

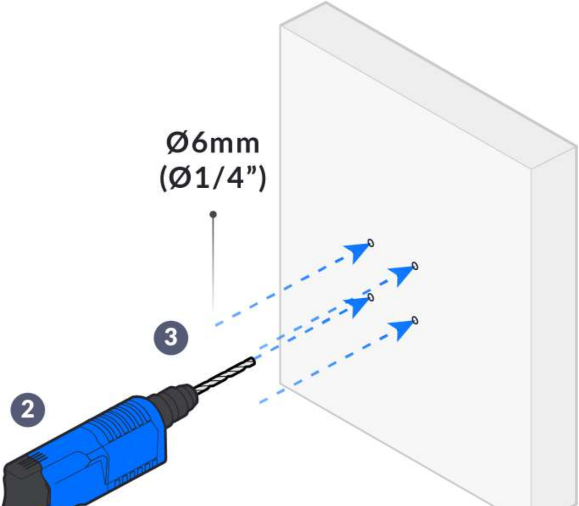

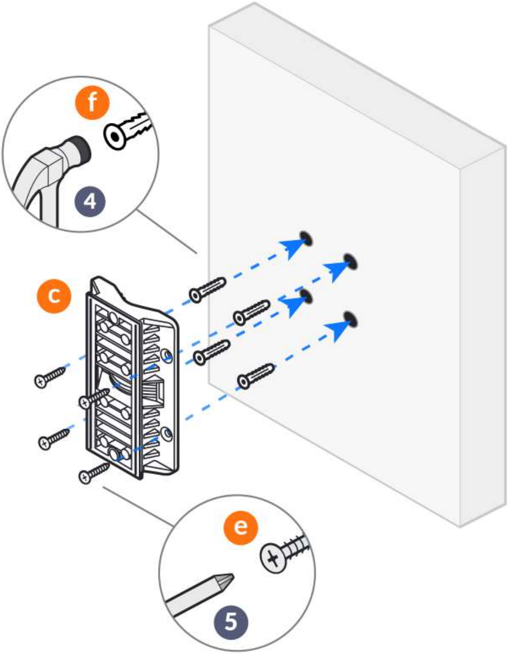

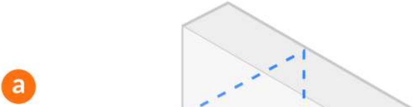

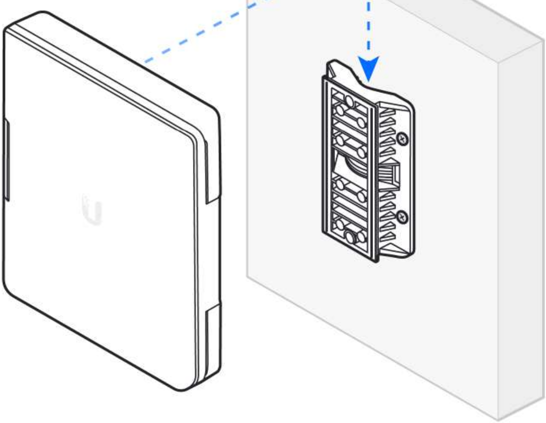

B

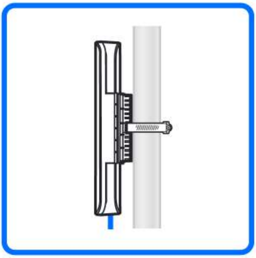

35mm<Ø<60mm

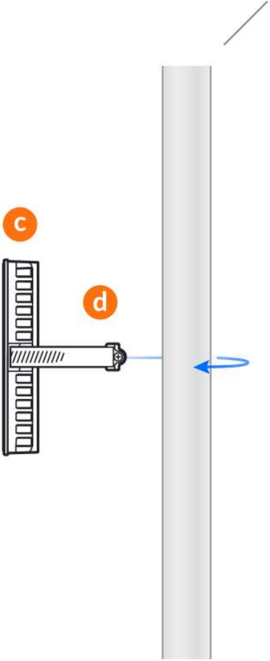

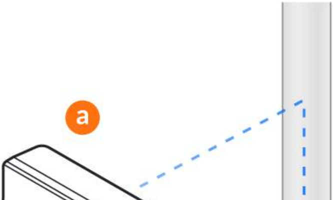

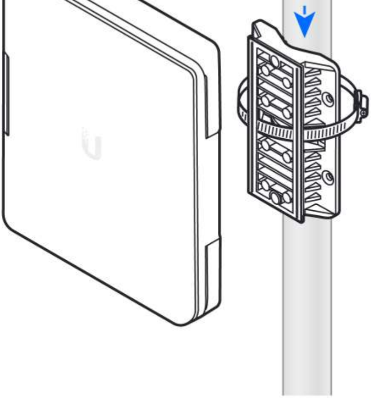

2

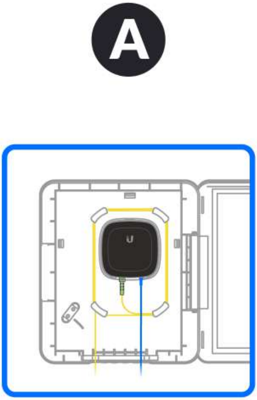

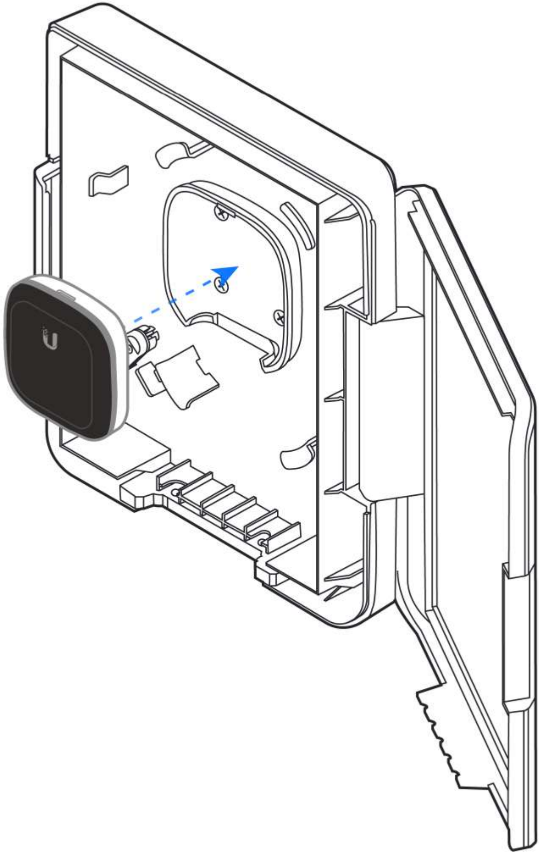

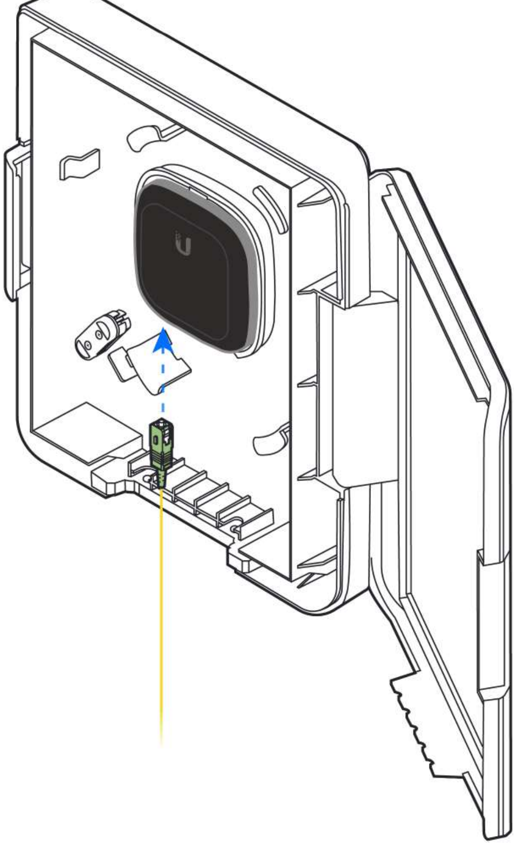

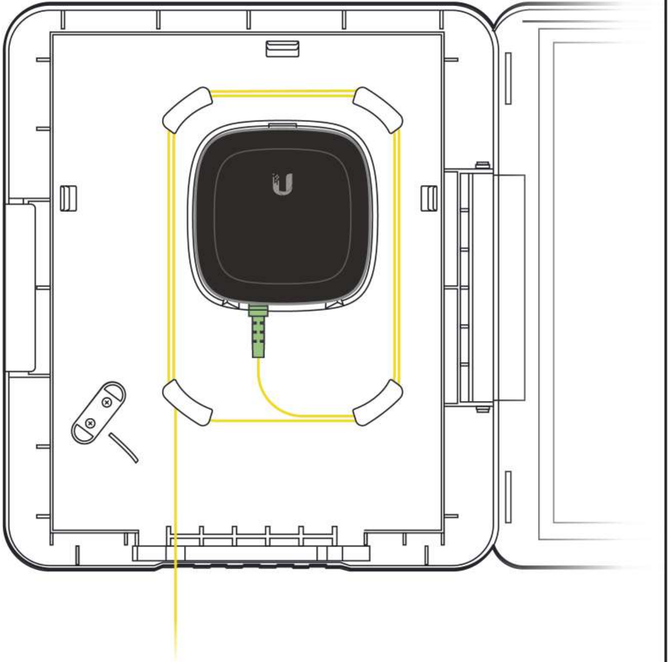

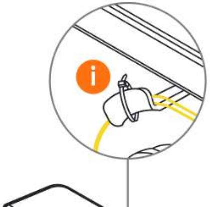

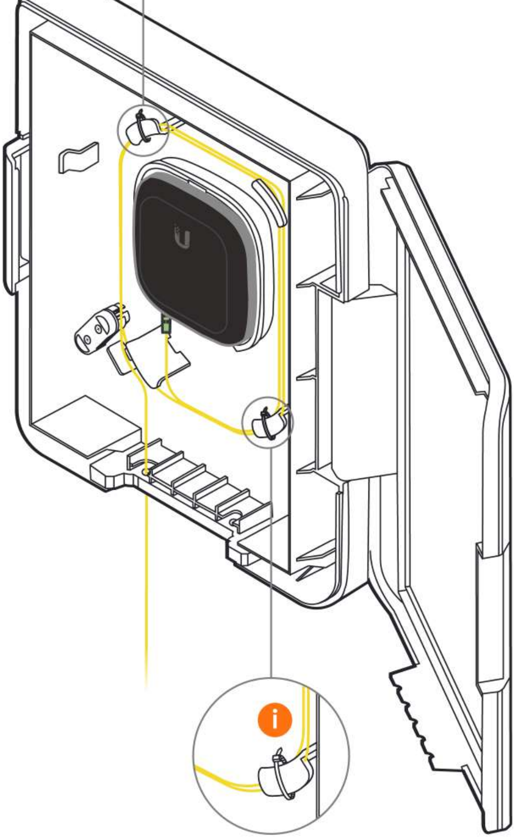

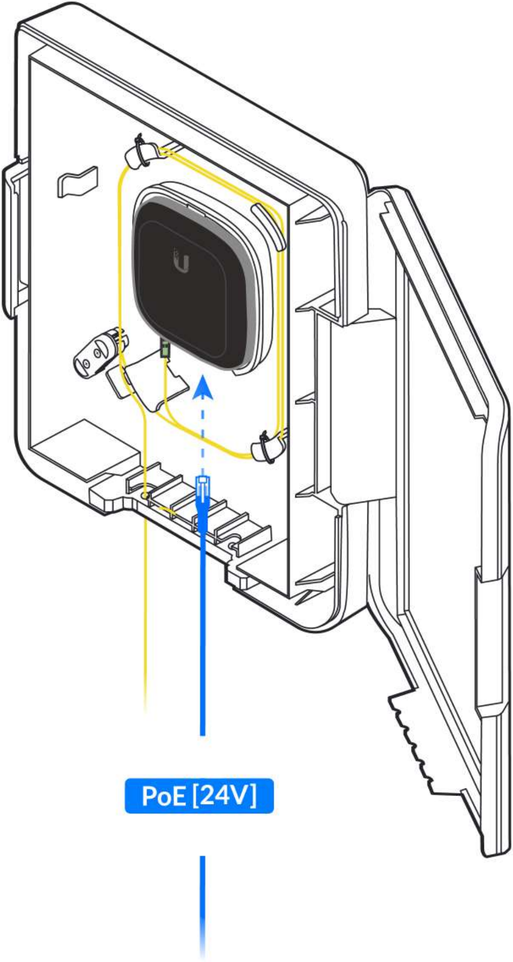

B

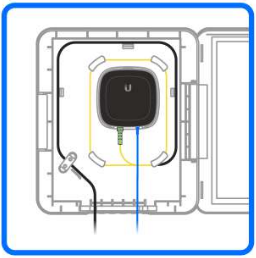

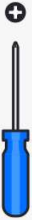

1

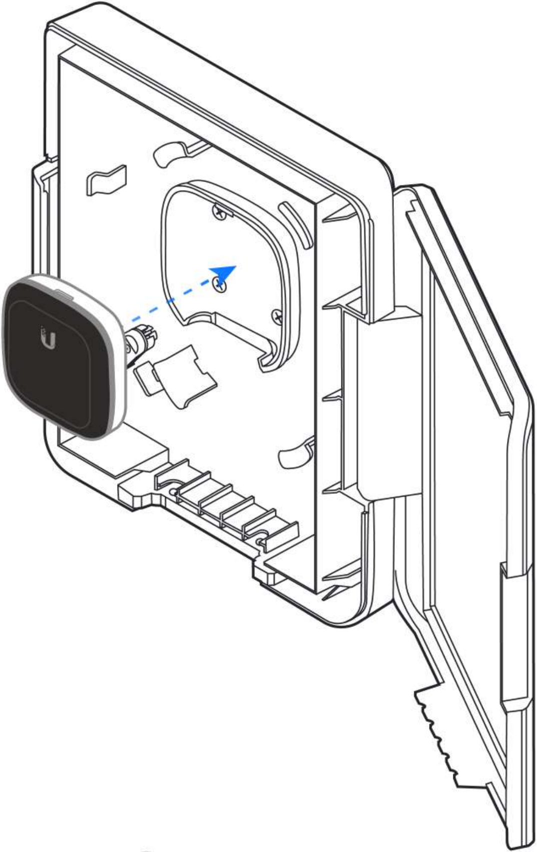

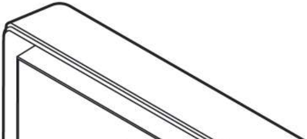

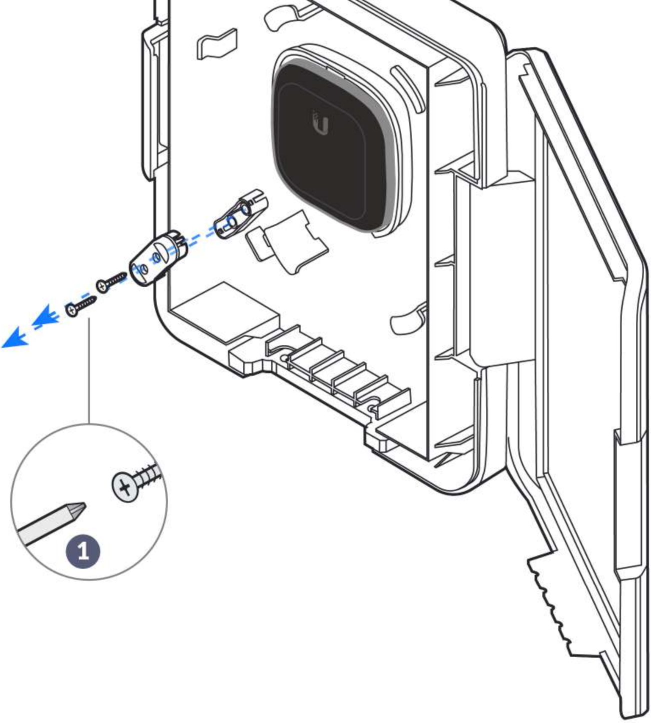

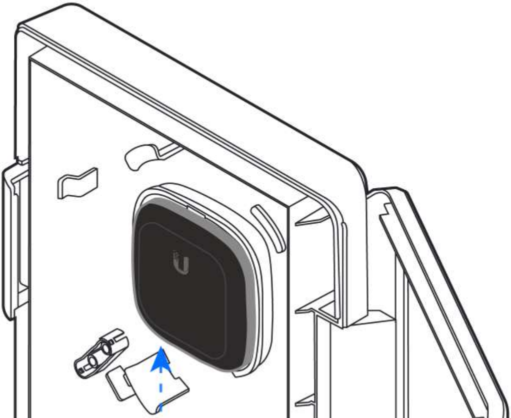

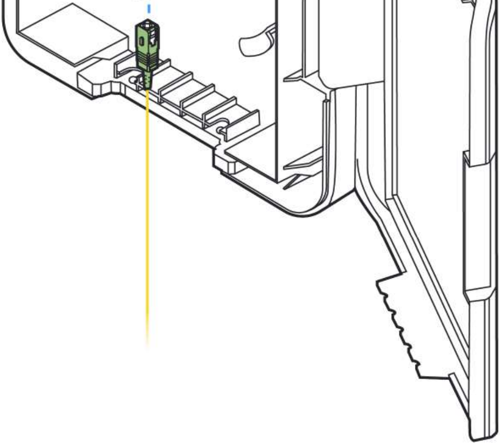

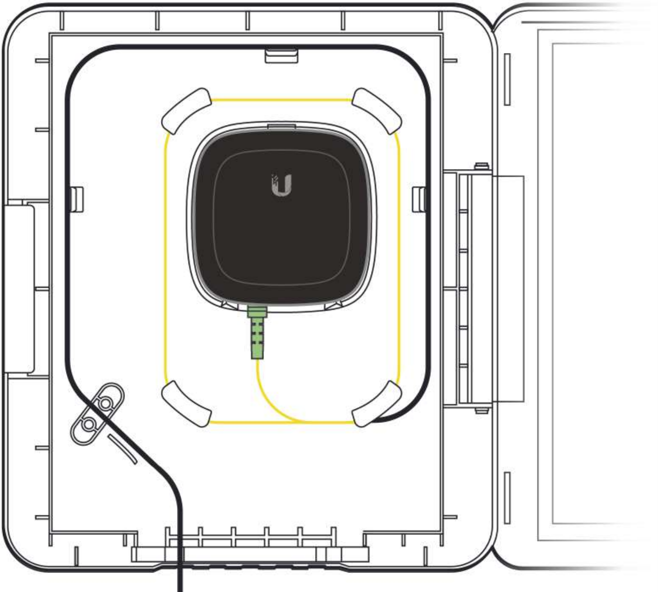

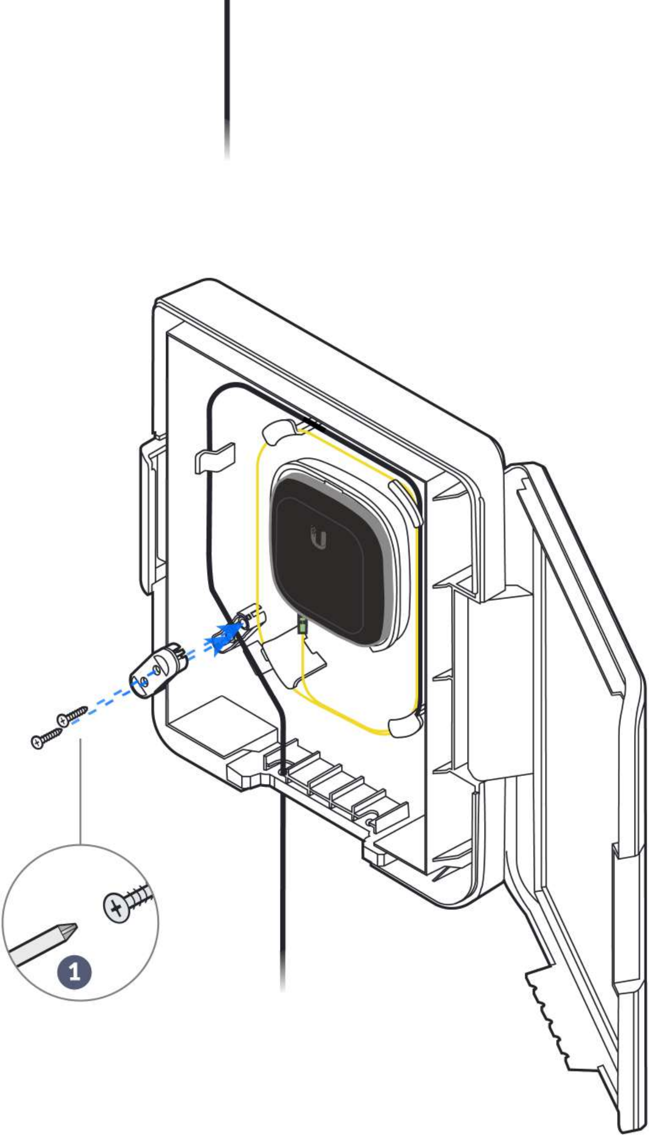

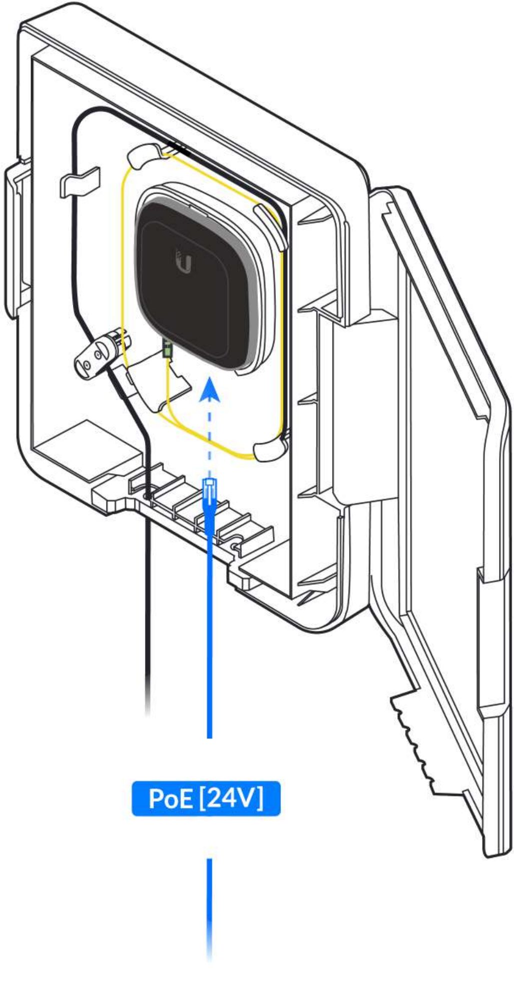

3

A

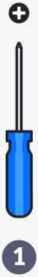

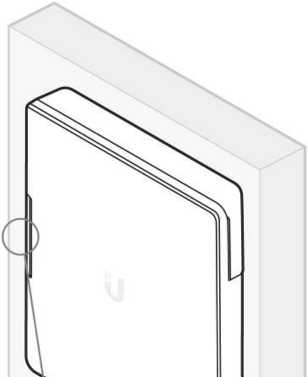

B

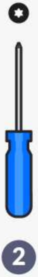

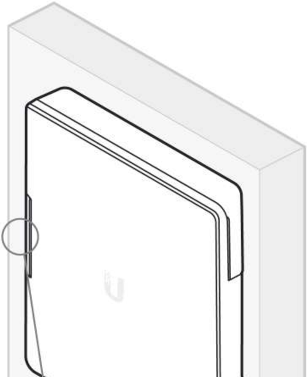

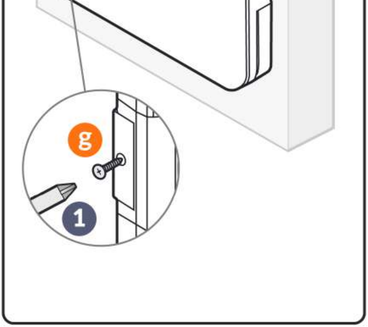

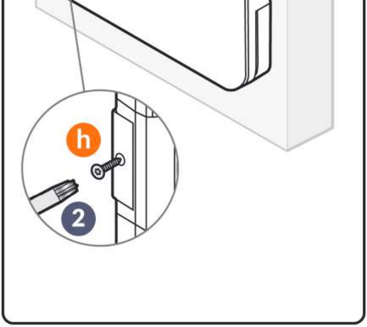

Get Answers
help.ui.com

UI Support

©2021 Ubiquiti Inc. All rights reserved. Ubiquiti, Ubiquiti Networks, the Ubiquiti U logo, and UFiber are trademarks or registered trademarks of Ubiquiti Inc. in the United States and in other countries. All other trademarks are the property of their respective owners.